phone: (303) 379-6926
email: orders@arc-fab.com

ArcFab
ARCHITECTURAL METAL FABRICATIONS

Company:_____
Color:_____ Gauge:_____
Soldered (Galv. & Copper Only): Yes No

Square to Round

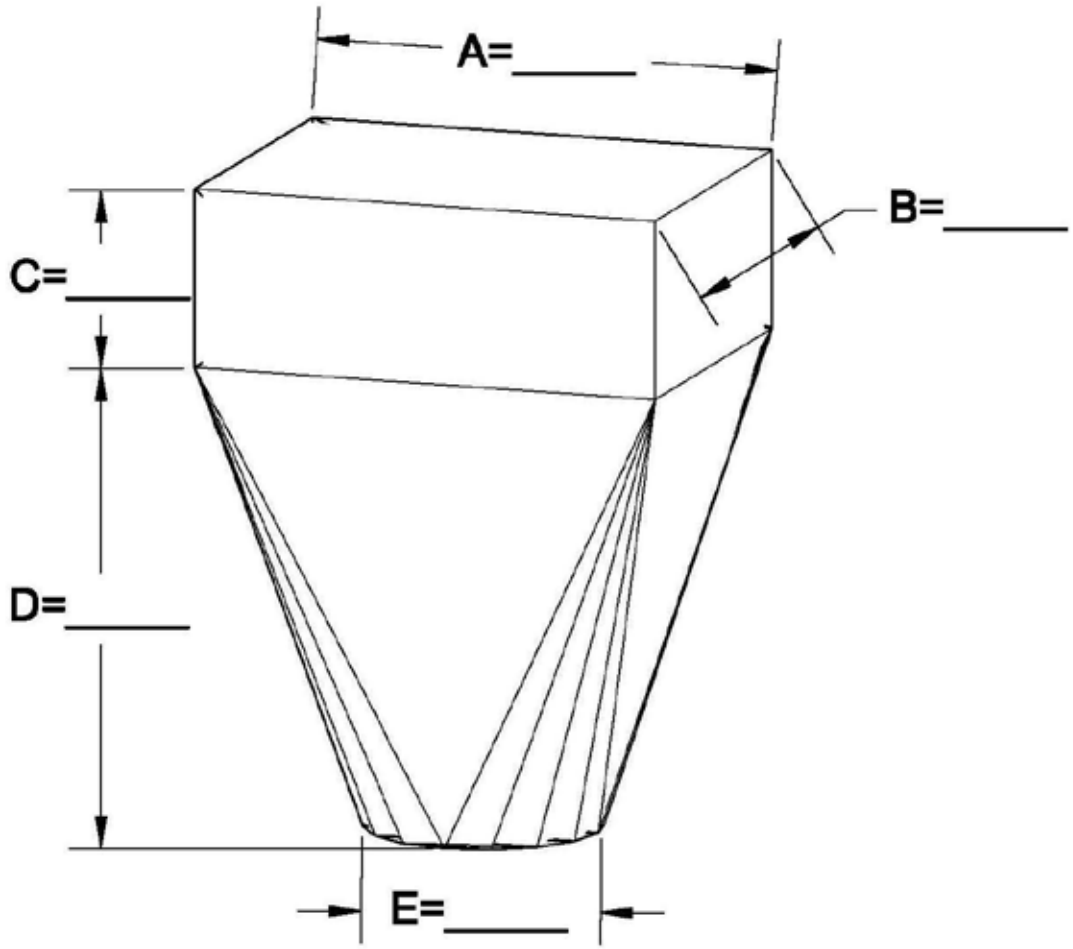

A = Downspout Width
B = Downspout Depth
C = Flange Height
D = Square to Round Height
E = Outlet Size